MEGACRETE MODULAR VAULT PANELS

U.L. CLASSIFICATION	APPROX. WEIGHT (PER SQ. FT. OF SURFACE)	THICKNESS (T)	TYPICAL WIDTH (W)
CLASS M	39 LBS. (±10%)	3"	40"
CLASS 1	65 LBS. (±10%)	5"	40"
CLASS 2	90 LBS. (±10%)	7"	36"
CLASS 3	142 LBS. (±10%)	11"	30"

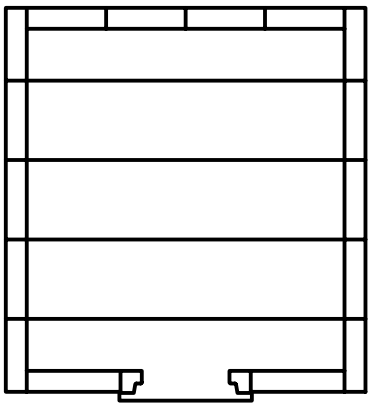

HORIZONTAL SECTION

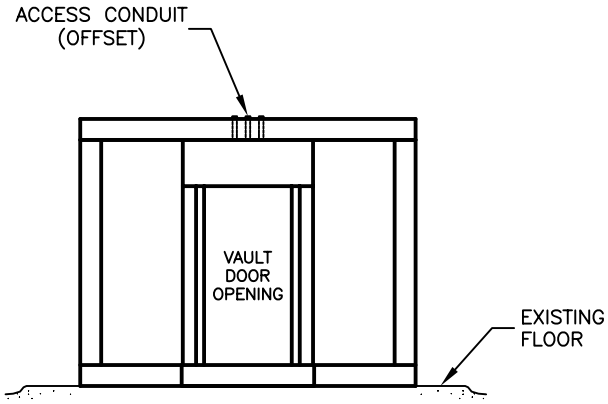

FRONT ELEVATION

TYPICAL VAULT LAYOUT

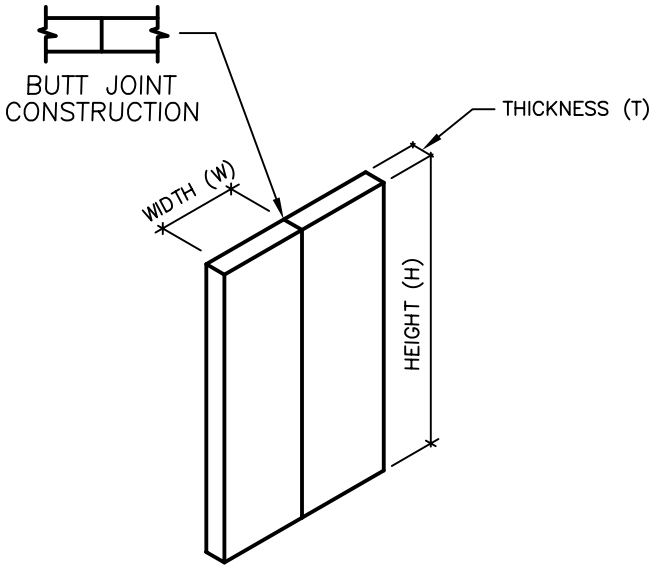

TYPICAL PANEL INTERFACE

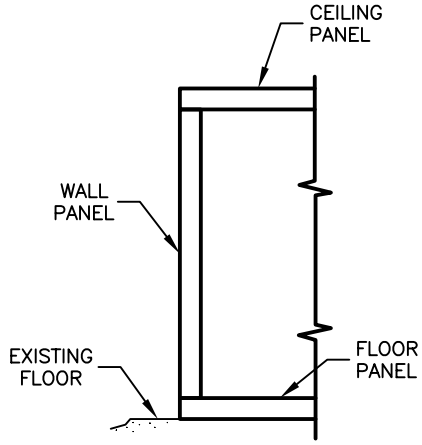

TYPICAL
FLOOR/WALL/CEILING
SECTION

INTERNATIONAL VAULT INC.

2469 OLD U.S. 421-N
SILER CITY, N.C. 27344
PHONE: (919) 742-3132
FAX: (919) 742-3319
WWW.INTERNATIONALVAULT.COM

TM.

MEGACRETE MODULAR VAULT SYSTEMS

DRAWN BY:	SCALE:	DISTRIBUTION:
WJC	N.T.S.	ALL
CHECKED BY:	**DATE:**	**DRAWING NO.**
CCS	05/04/2005	P1-1